Precast Concrete & Accessories
58 Prospect Street, Auburn, N.Y. 13021
315 252 7214 1 800 479 6335
Fax 315 252 7859

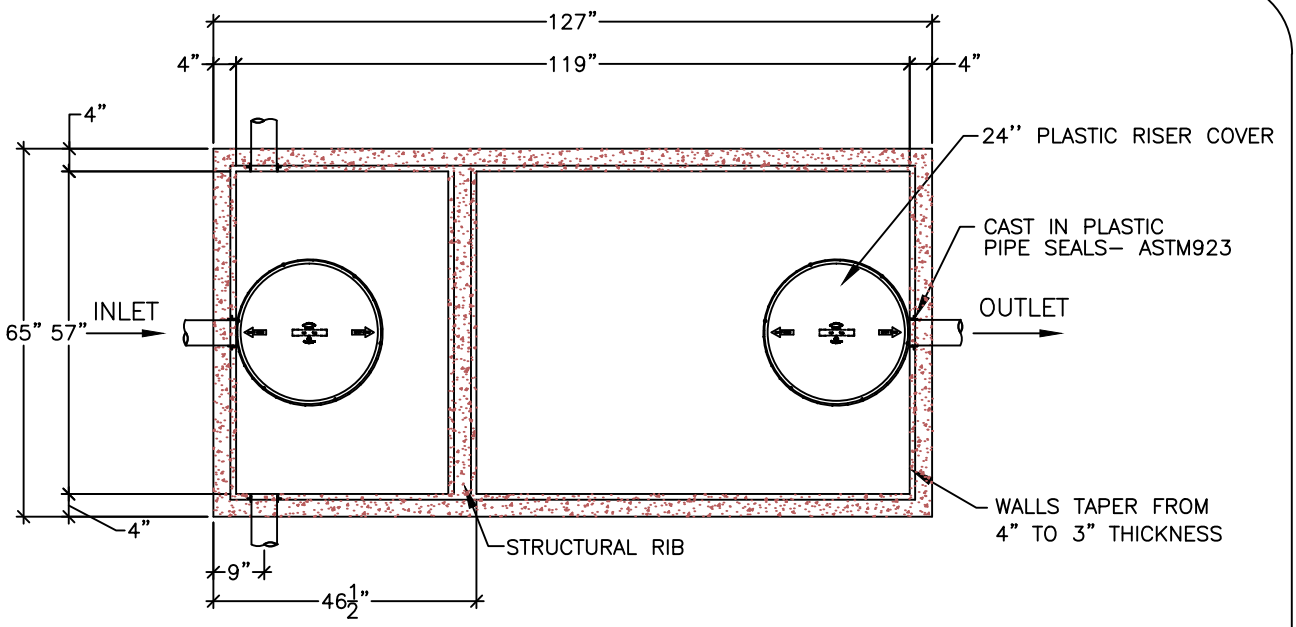

PLAN VIEW

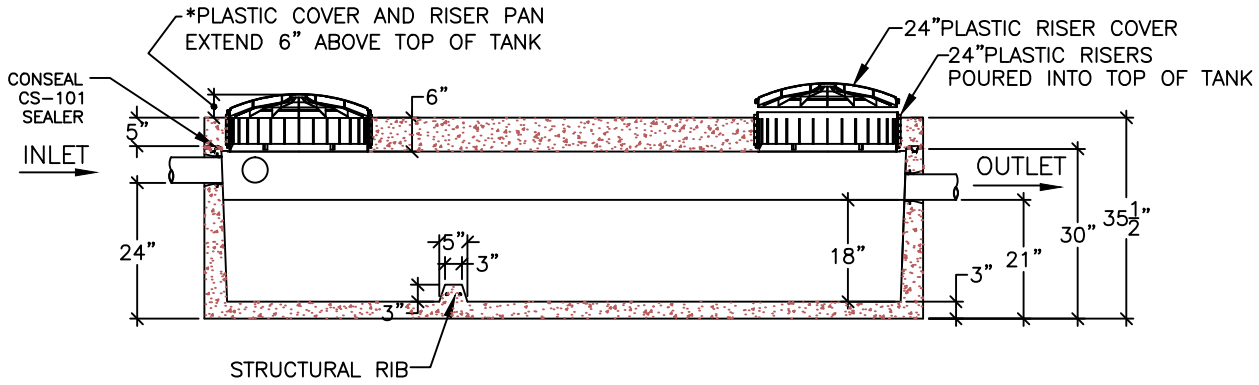

SECTION VIEW

NOTES:
- APPROX. WEIGHT: 9,766 LBS [4.9 TON]
- 29.36 GALS PER INCH OF RISE
- MEETS OR EXCEEDS 5000PSI–COMPRESSIVE STRENGTH CONCRETE

500 GALLON - UTILITY TANK

DRAWN BY: LWK	FILE NAME: NEW UT-500	DATE: 4/13/04	SCALE: 3/8"= 1' 0"	SHEET: UT-7